Oscillometry

This method predates the method of Korotkoff but was not originally as popular. However, it is now the standard method for automated Blood Pressure measurement. In 1885 the French physiologist Marey observed that, if he placed a patient's arm in a pressure chamber then the pressure of the chamber would fluctuate with the pulse and the magnitude of the fluctuation would vary with the pressure of the chamber. It is now known that these fluctuations correspond to the occluding effect on the artery of pressure applied uniformly to the arm and that the same effect can be observed in the pressure of an occluding cuff.

Figure 50 shows the fluctuations observed in an occluding cuff as the pressure is initially raised and then gradually dropped. The second graph shows the cardiac synchronous oscillations present in the cuff pressure which, as indicated above, vary with the cuff pressure.

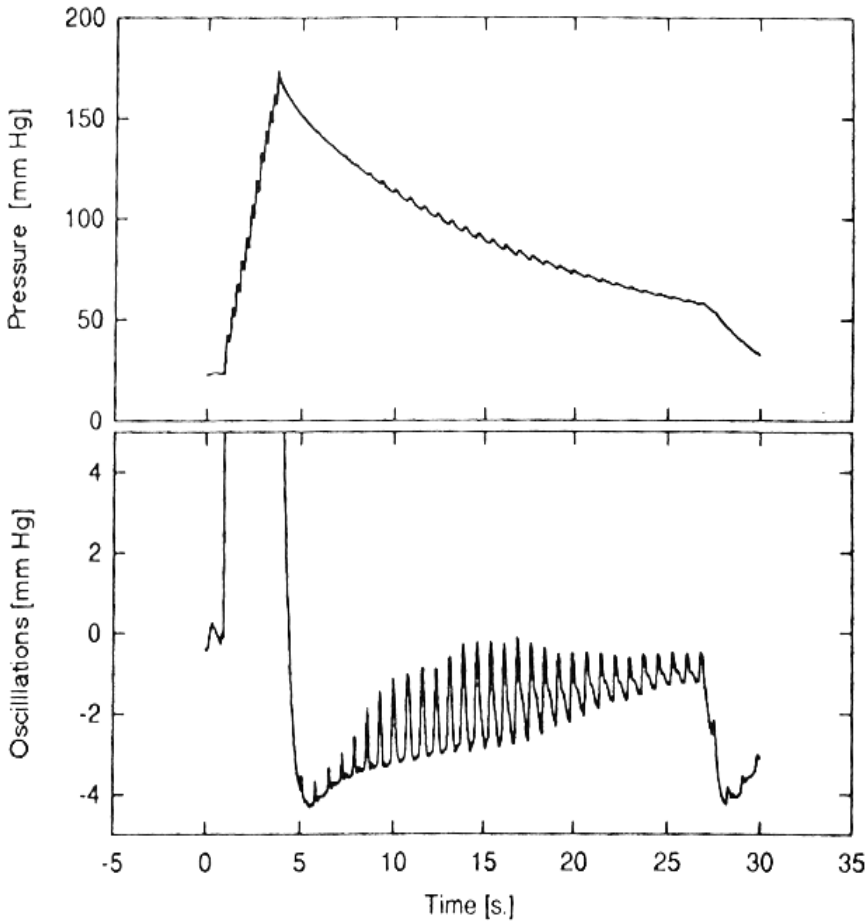

Figure 50: A recording of cuff pressure. The pressure is initially raised rapidly and then lowered slowly. Source: Bronzino

Using oscillometric information

Intuitively, one might suspect that the onset of the oscillations would occur at systolic pressure and the disappearance of the oscillations would occur at diastolic pressure. In fact, the onset of oscillations actually occurs well above systolic pressure and the oscillations do not disappear until well below diastolic pressure.

However, it has been shown that the pressure, P_m, at which the oscillations have the maximum amplitude, A_m, is the mean arterial pressure (MAP). Empirical and theoretical

work has shown that the systolic and diastolic pressures, P_s and P_d respectively, occur when the amplitudes of oscillation, A_s and A_d respectively, are a certain fraction of A_m:

- P_s is the pressure above P_m at which $A_s/A_m = 0.55$
- P_d is the pressure below P_m at which $A_d/A_m = 0.85$

Using this method, it is therefore possible to design a device for measuring Blood Pressure non−invasively in which it is not necessary to analyse the Korotkoff sounds and only a cuff needs to be attached to the patient. A block diagram of such a system is given in Figure 50 in which the cuff control system is the same as that discussed for an automated Korotkoff system above (see Figure 48) but without the pressure sensing.

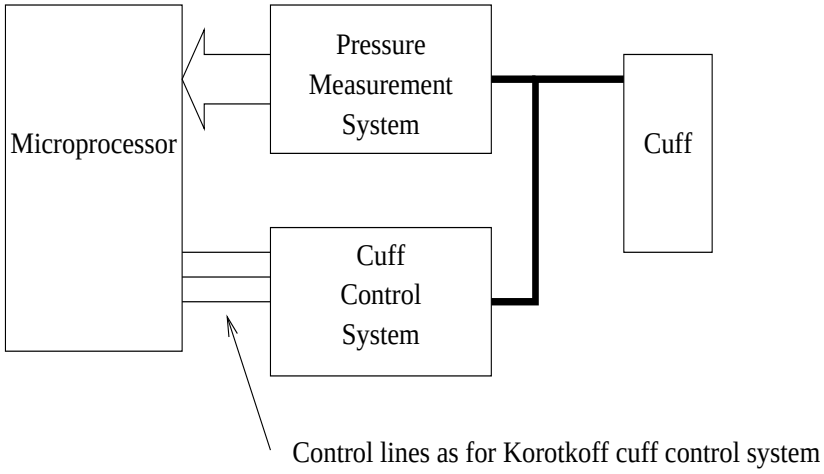

Figure 51: OVerview of a system for Oscillometric Blood Pressure

Figure 51 shows the major components of the pressure measurement system which will now be considered block by block.

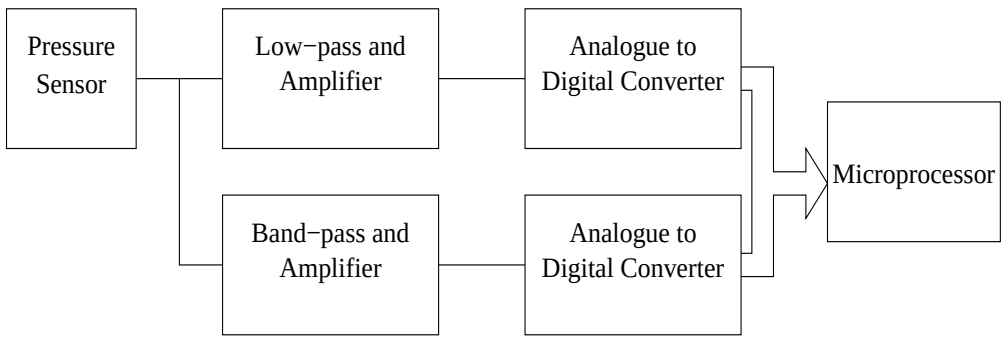

Figure 52: A block diagram for the pressure side of an oscillometric Blood Pressure system

Pressure sensor

Pressure sensors typically employ the piezo−resistive principle to convert pressure to an electrical signal. A silicon chip is micro−machined to give a diaphragm around which four resistors are diffused in a bridge configuration. Application of pressure to the diaphragm results in a change in the value of these resistors which creates a differential voltage output proportional to the applied pressure.

We need to measure pressure from above the highest systolic pressure (including any fluctuations that may be present) to below the lowest possible diastolic pressure (again, including any fluctuations that may be present). Systolic pressures above 260 mmHg are rarely seen and so a range of 0 to 300 mmHg should achieve this. However, pressure sensors are normally specified (in the UK, at least) in psi, Given that 1 mmHg is 0.01933 psi, a

range of 0 to 5.8 psi is required. However, it must also have sufficient resolution to accurately describe the fluctuations in pressure which are of the order of a few mmHg, *ie* about 1% of the pressure range.

The ranges either side of that which are readily available in appropriate components are 0 to 5 and 0 to 15 psi. Using the smaller range will restrict the range of Blood Pressure's which can be measured whereas using the larger range may result in less accurate measurement because the accuracy of these components is typically a fraction (of the full scale measurement). Typically, the accuracy of the reading is 0.2 to 0.5% of the full scale reading. 0.5% of 15 psi is 0.075 psi or 3.9 bar which is too course to capture the fluctuations. The choice of sensor would therefore be a design decision between a device which cannot take blood pressure readings for patient's with extremely high blood pressure (*hypertension*) weighed against the cost of a custom built sensor.

Typically, these sensors have an output impedance of 5 kΩ and generate differential outputs with a full scale span of 200 mV although they are not calibrated at manufacture.

Filters and amplifiers

Looking back at Figure 50 it is clear that there are two pieces of information in the pressure signal: the underlying pressure to which the cuff has been inflated (or deflated) and the fluctuations present on the signal. The underlying signal is a low frequency signal and can be extracted by passing the signal through a low−pass filter. The fluctuations, which are cardiac synchronous, can be extracted using a band−pass filter.

Given that the outputs from the sensor are differential, differential amplifiers and filters are required here. There are various standard solutions to such a problem. However, in this case it is essential that the circuit used has a near infinite input impedance because the sensors have a finite output impedance (approximately 5kΩ) which varies with the applied pressure.

It is also inappropriate to drive two amplifiers directly from the sensor and so the sensor itself must be connected to a high input−impedance differential buffering amplifier from which two filters can be driven. This is similar to the problem faced when designing an ECG instrumentation amplifier in which it is necessary to both amplify the ECG signal and drive a third electrode with the common−mode voltage (the 'driven right leg' circuit). Hence an instrumentation amplifier such as the one shown in Figure 53 would be appropriate.

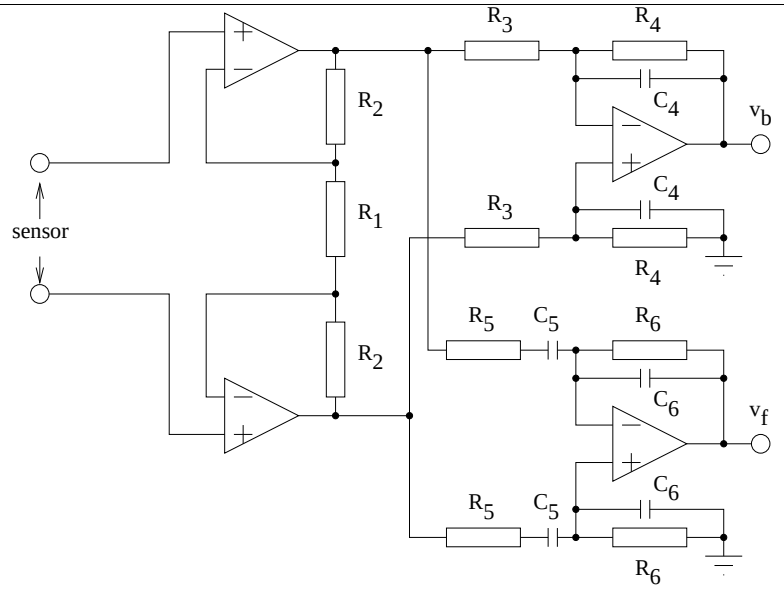

Figure 53: Low−pass instrumentation amplifier for a pressure sensor

Not surprisingly, this circuit is very similar to the circuit considered for silver−silver electrodes in the discussions of ECG circuitry above. It achieves a very high input impedance with good noise performance. Two second stage differential amplifiers form the low and band−pass filters and output two signals: a baseline signal, v_b and a fluctuations signal v_f.

Analogue to digital converters

The signals should now be digitised for processing. They must each be digitised with sufficient accuracy and at a sufficient rate to capture the salient features:

- The microprocessor will need to correlate pressure at any given moment in time with the amplitude of fluctuation at that point in time. Consequently, the A/D converters should run at the same rate and, ideally, take samples at the same times.
- The highest frequency signal we wish to sample is the cardiac synchronous fluctuation signal. 5 Hz is a reasonable upper limit for the heart rate. Nyquist sampling theory indicates that the minimum rate at which sampling will not lose information is therefore 10 Hz. However, in this case it is necessary to characterise the fluctuations in some detail and so it is necessary to take 5 to 10 samples per cardiac synchronous fluctuation. A sampling rate of 50 to 100 Hz would therefore be appropriate.
- v_b must be digitised with sufficient accuracy to describe the underlying pressure to 1 or 2 mmHg is a range of 300 mm Hg. 8 bits give a dynamic range of 2^8 or 256 which should be sufficient.

  If the pressure sensor output is 1 mV per mmHg then the instrumentation amplifier, including the low−pass section, must amplify 300 mV to close to the maximum input of the A/D converter. If the A/D converter has a rang of 0 to 5 V then the pass−band gain must be 16.7.
- vf must be digisited with sufficient accuracy to describe the fluctuations with sufficient accuracy so that the relative amplitude of each fluctuation can be determined. 8 bits gives a dynamic range of 256 or a step of 1/256 which is less than half a percent, which should be sufficient given that fractions given earlier.

  Assuming the same sensor as in the previous bullet point and noting that the maximum amplitude of fluctuation we can expect is 6 mmHg, the maximum fluctuation in the

sensor signal is 6 mV. A pass−band gain of 833 is therefore necessary to fully use a 0 to 5V digitisation range.

Given these two gain requirements, the components must be selected carefully!

Microprocessor

The final component is the microprocessor. This runs a program which controls the cuff (via the three phase cuff control circuitry, as considered above for the automation of the method of Korotkoff) and interprets the two pressure signals.

The fluctuation signal will be analysed to determine the amplitude of the fluctuations at any point in time. The point of maximum fluctuation will be when the underlying pressure is the Mean Arterial Pressure (MAP). Having determined this, the Systolic Pressure can be determined by reviewing the data already acquired and selecting the underlying pressure which corresponds to an amplitude of 0.55 of the fluctuation amplitude at the MAP.

The Diastolic Pressure will be the underlying pressure when the amplitude of the fluctuations has decreased to 0.85 of its maximum value. The accuracy of the systolic and diastolic pressures could be increased through the use of interpolation. Once this has been determined the cuff can be deflated and the readings returned.

Finally, the microprocessor may also calculate the Pulse Rate of the patient. The fluctuations that have been analysed for amplitude information are cardiac synchronous and so determining their frequency will give a Pulse Rate.

Pulse Transit Time

When the heart beats, freshly oxygenated blood is pumped into the circulation system and a pressure wave is propagated along the arteries away from the heart. The velocity of this propagation is dependent on various parameters. However, one of the key factors is the stiffness of the arterial walls. The stiffer the walls, the faster the wave propagates.

If the arteries are modelled as a tube, it can be seen that the stiffness of the arteries will relate to the pressure of the fluid in that tube: The higher the pressure, the stiffer the tube. Consequently, if all other things are equal, the higher a person's blood pressure the more rapidly the pressure wave resulting from a heart beat will propagate away from the heart.

This has been known for at least 20 years and two measures have commonly been used to measure how fast the pressure wave propagates:

- *Pulse Transit Time*: the time it take the wave to propagate from the heart to a specified point on the body, typically the finger or earlobe.
- *Pulse Wave Velocity*: the speed at which the wave propagates.

There is an extensive research literature on the subject from which it is clear that these terms have not been consistently defined more accurately than that! For this course, we will primarily consider Pulse Transit Time (PTT), the corollaries with Pulse Wave Velocity are fairly obvious.

Measuring Pulse Transit Time

Pulse Transit Time has traditionally been defined as being the elapsed time between the blood being ejected from the heart and the arrival of the pulse at an extremity, typically a finger. Two physiological signals are generally used to determine these two points in time:

- The ECG trace can be used to infer the point at which the heart beats. The peak of the QRS complex is a good marker for this.
- A photoplethysmograph trace shows a major rise when the pressure wave arrives. The literature suggests that the point 25% of the way up the rise is the best time to use.

Figure 53 shows these two traces with the PTT marked on it.

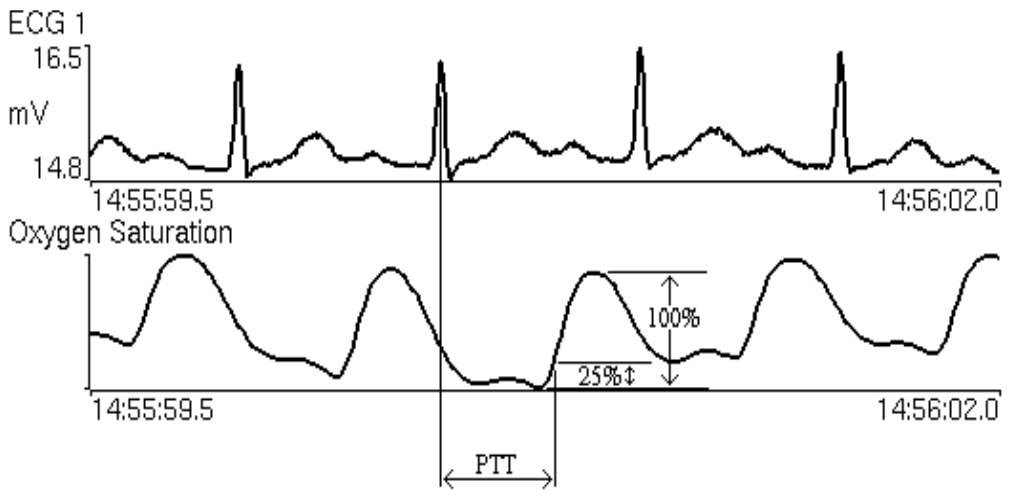

Figure 54: Pulse Transit Time (PTT) measured from the peak of the QRS complex in the ECG trace to the arrival of fresh blood at a peripheral point as shown in a photoplethysmograph trace

PTT values are almost invariably calculated in software from digitised version of the traces and, as can be seen, can be calculated once per heart beat. Consequently, if PTT can be

correlated with Blood Pressure, then beat−by−beat (*ie* continuous) Blood Pressure readings are possible.

Improving PTT measurements

Although the above methodology has been used by many research scientists, it has become clear in the past decade that improvements could be made to this approach. Referring back to Figure 8, it can be seen that the blood is not ejected from the heart at the peak point of the QRS complex: it is actually ejected a short time later. This lag, known as the *pre−ejection period* is neither a constant nor uniquely correlated with Blood Pressure and presents a confounding factor if we wish to estimate Blood Pressure from PTT values.

In order to eliminate the pre−ejection period from the calculated PTT, a second photoplethysmograph is used. Generally is it placed on another extremity, but one a different distance from the heart than the first extremity. Often the ear and the finger are used. If we define T_f to be the R−peak to finger time, T_e to be the R−peak to ear time and T_p to be the time duration of the pre−ejection period then:

$$T_f = PTT_{finger} + T_p \quad \text{and} \quad T_e = PTT_{ear} + T_p \quad .$$

Subtracting the two observed measures T_f and T_e gives:

$$T_f - T_e = PTT_{finger} - PTT_{ear} = \Delta PTT$$

This gives us a new measure, ΔPTT, which is related to how rapidly the blood flows down the arteries and is independent of the pre−ejection period. It is this measure that, all other things being equal, one might use to estimate Blood Pressure.

Estimating Blood Pressure

There are three problems which need to be overcome to estimate blood pressure from PTT measurements such as the one discussed above:

1. Factors other than Blood Pressure (including age related effects) affect the absolute value of the PTT measurement. This means that it will never become a complete replacement for other methods for measuring Blood Pressure. However, the changes in PTT will nevertheless correlate with change in Blood Pressure and so system which calibrates it self using a cuff based system could then provide beat−to−beat Blood Pressure readings non−invasively thereafter.
2. There are changes in PTT which are not related to Blood Pressure (bending the arm, for example).
3. The relationship between the PTT measure and Blood Pressure is non−linear and needs to be carefully characterised.

These problems have already been resolved for a particularly easy situation (anaesthetised patients) and it seems likely beat−to−beat Blood Pressure using Pulse Transit Time techniques will become readily available in the next few years.