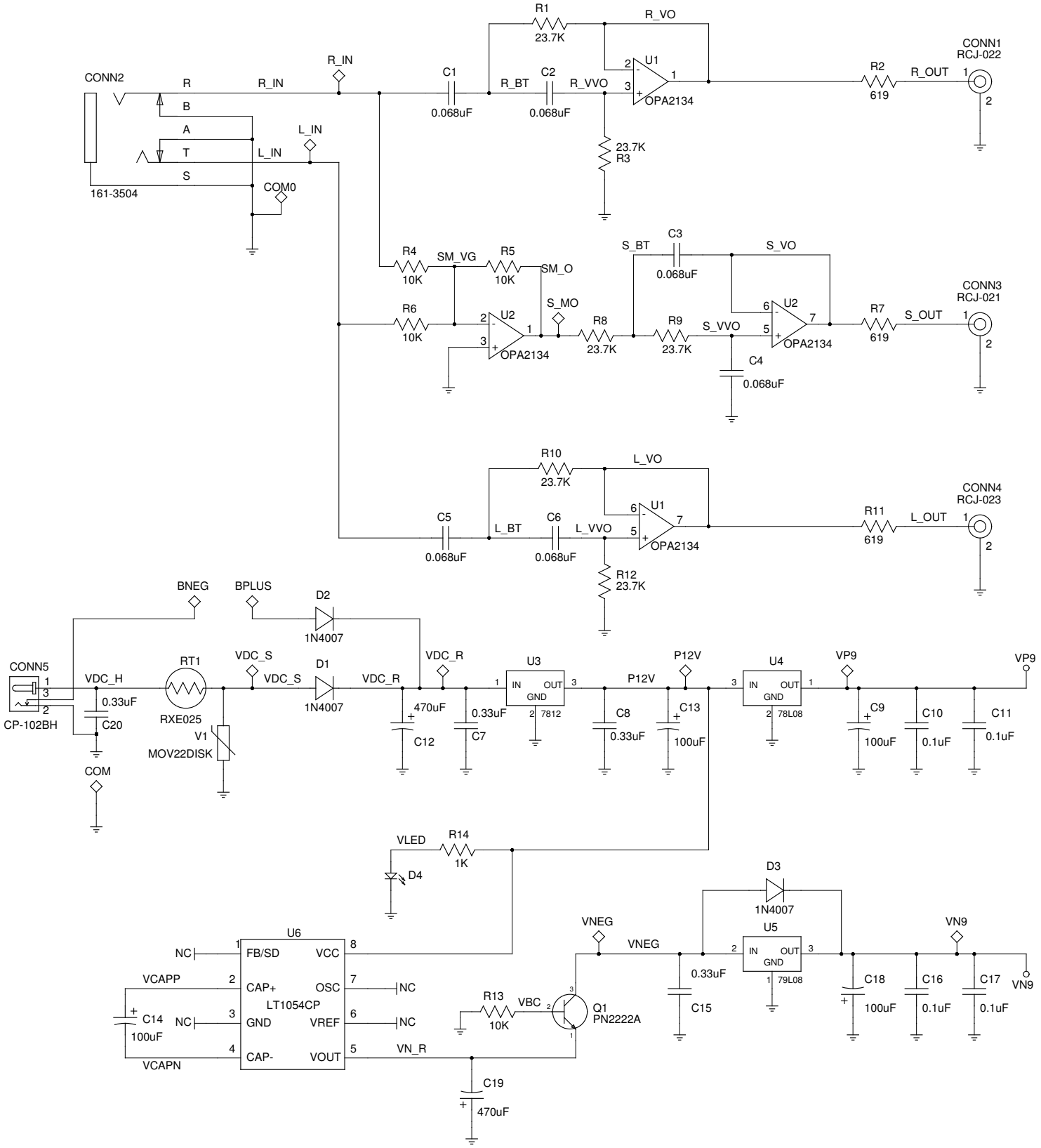
CONN2
R
B
A
T
S
161-3504
R_IN
L_IN
COM0
R1
23.7K
R_VO
U1
OPA2134
C1
0.068uF
R_BT
C2
0.068uF
R_VVO
23.7K
R3
R2
619
R_OUT
CONN1
RCJ-022
R4
10K
SM_VG
R5
10K
SM_O
R6
10K
U2
OPA2134
S_MO
R8
23.7K
S_BT
C3
0.068uF
S_VO
R9
23.7K
S_VVO
C4
0.068uF
R7
619
S_OUT
CONN3
RCJ-021
R10
23.7K
L_VO
C5
0.068uF
L_BT
C6
0.068uF
L_VVO
R12
23.7K
R11
619
L_OUT
CONN4
RCJ-023
BNEG
BPLUS
D2
1N4007
CONN5
CP-102BH
VDC_H
0.33uF
C20
RT1
RXE025
V1
MOV22DISK
VDC_S
D1
1N4007
VDC_R
470uF
C12
0.33uF
C7
U3
IN
OUT
GND
7812
P12V
C8
0.33uF
C13
100uF
U4
78L08
VP9
C9
100uF
C10
0.1uF
C11
0.1uF
COM
VLED
R14
1K
D4
D3
1N4007
U6
LT1054CP
FB/SD
VCC
CAP+
OSC
GND
VREF
CAP-
VOUT
NC
VCAPP
VCAPN
C14
100uF
R13
10K
VBC
Q1
PN2222A
VNEG
U5
79L08
0.33uF
C15
C18
100uF
C16
0.1uF
C17
0.1uF
VN9
VN_R
C19
470uF