# JOULE THIEF AND SOLAR BATTERY SCHEMATICS

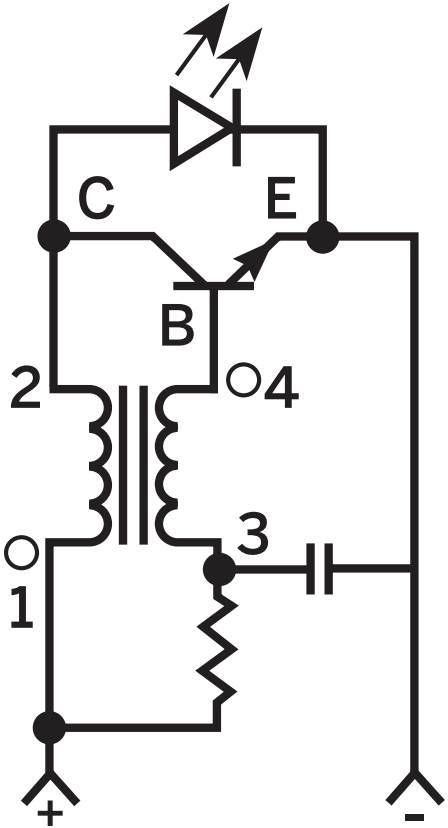


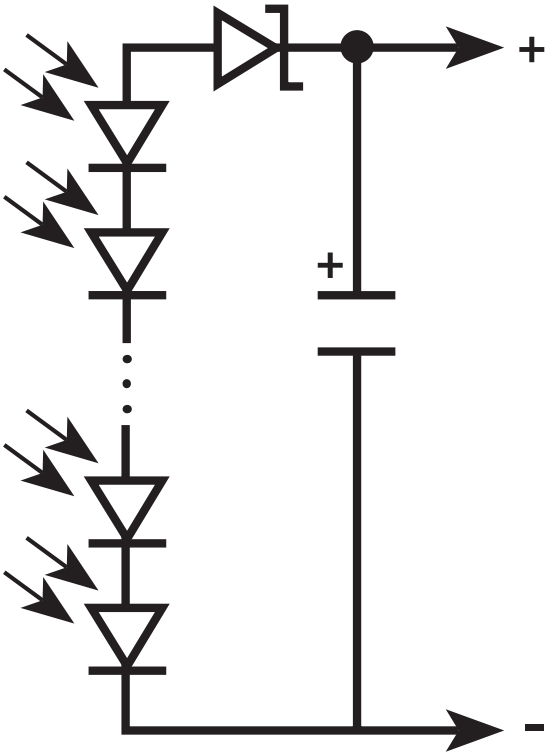


A